Datasheet

PROLED ALUMINIUM PROFILE M-LINE EXTRA LOW

Article number:	L69A000
Article name:	PROLED ALUMINIUM PROFILE M-LINE EXTRA LOW
Article description:	PROLED ALU PROFILE M-LINE EXTRA LOW 2m
GTIN:	4251158416038

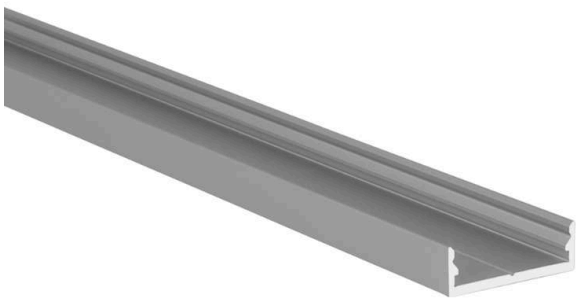

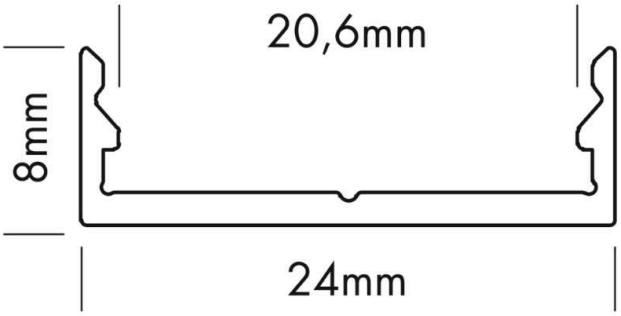

picture similar

Technical properties:

Shape:	angular
Housing colour:	silver
Housing material:	alu
Housing surface:	anodized
Ambient temperature:	-10 °C to 45 °C
Accessories type:	Profile

Housing and size:

Size:	2000 x 24 x 8 mm (l x w x h)
Product weight:	0,260 kg

Date: 30.4.2024

Technical amendments and errors reserved.

PROLED®
MBN GmbH | Balthasar-Schaller-Str. 3 | 86616 Friedberg | Germany
Phone +49.821.60099-0 | Fax +49.821.60099-99
Central: info@proled.com | Internet: www.proled.com
Registered office of the company: Friedberg | Amtsgericht Augsburg HRB 19419 | Managing Director: Dr. Bernhard Steidl, Christian von Sassen