A

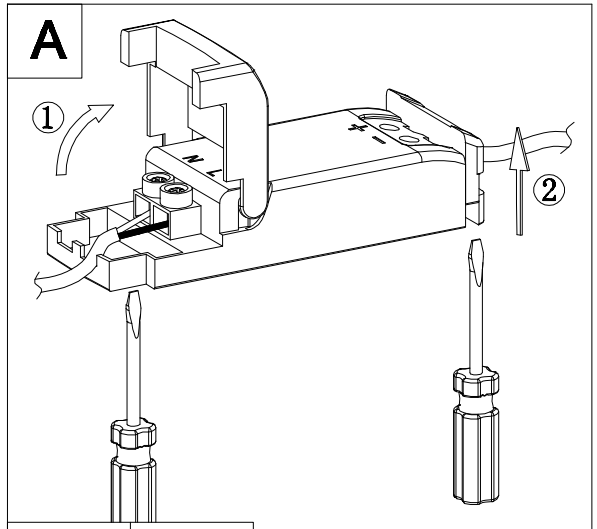

TOOL	screw driver

Lightly open the front and back covers with a screwdriver,then open it up

B

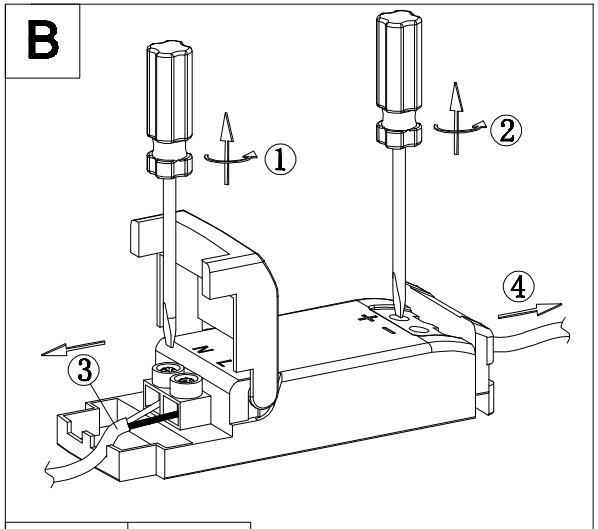

TOOL	screw driver

Release the screws of the blue, brown, red, and black wire with a screwdriver, and then remove them from the transformer

C

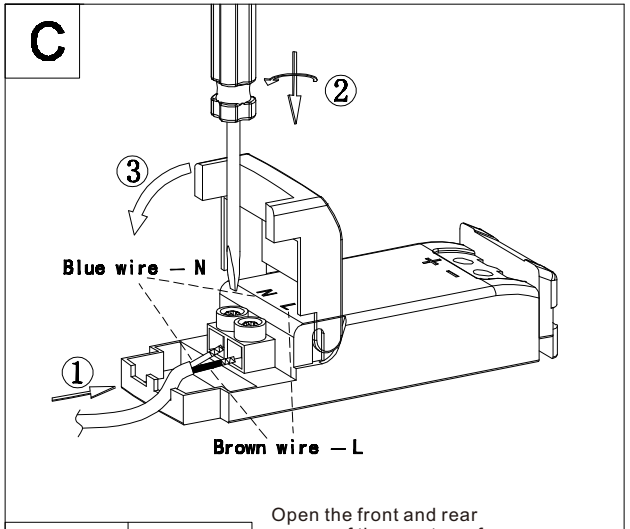

TOOL	screw driver

Open the front and rear covers of the new transformer and then connect the brown wire to the“L”, connect the blue wire to the “N”, after then,please cover the transformer cover.

D

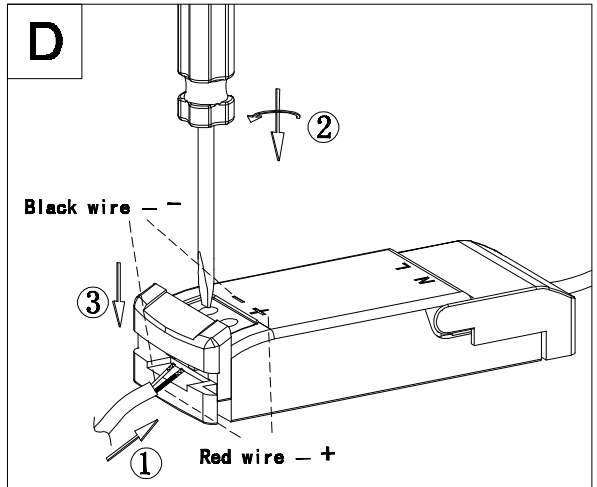

TOOL	screw driver

the red wire connect “+”, the blue wire connect “−” after connect them, please cover the cover