ASY WINK 115 LED GE

130710XX 130711XX 130712XX 130713XX 130714XX 130715XX 130716XX 130717XX 130718XX 130719XX 130720XX 130721XX

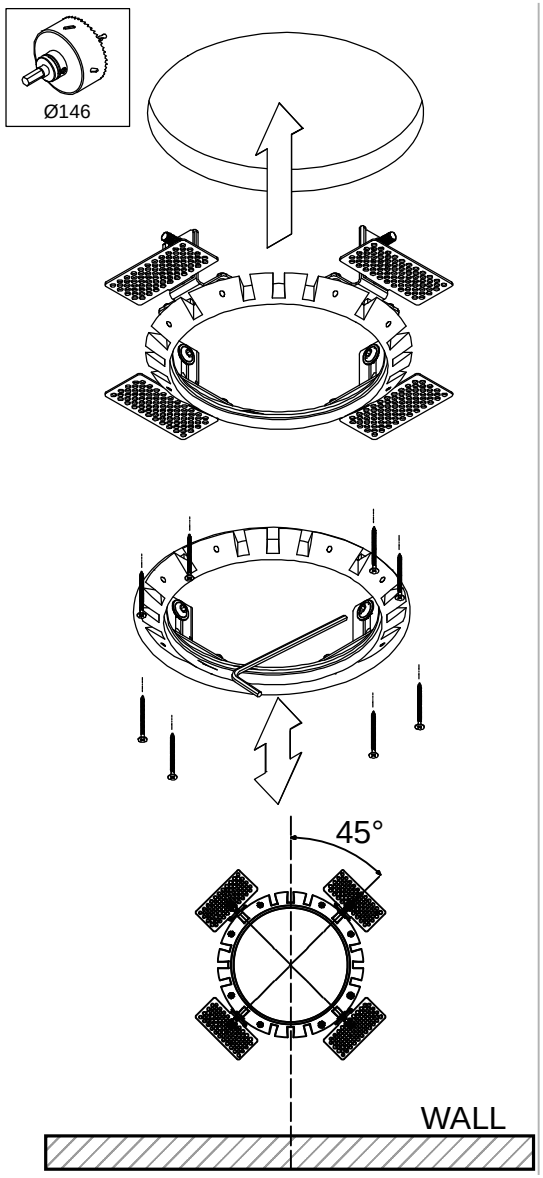

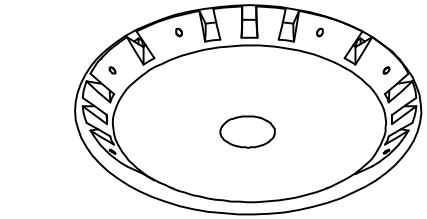

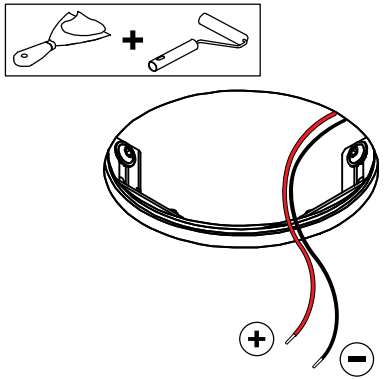

350mA - min 29,1Vf - max 33,7Vf - 11W
500mA - min 29,9Vf - max 34,7Vf - 16,2W
700mA - min 31,0Vf - max 35,8Vf - 23,4W
900mA - min 31,7Vf - max 36,9Vf - 31 W

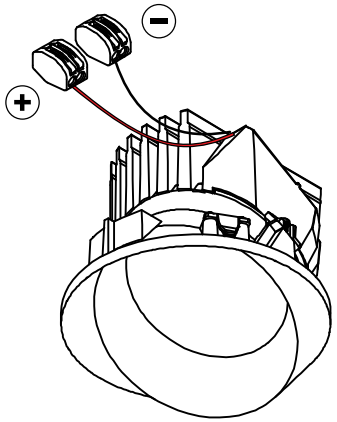

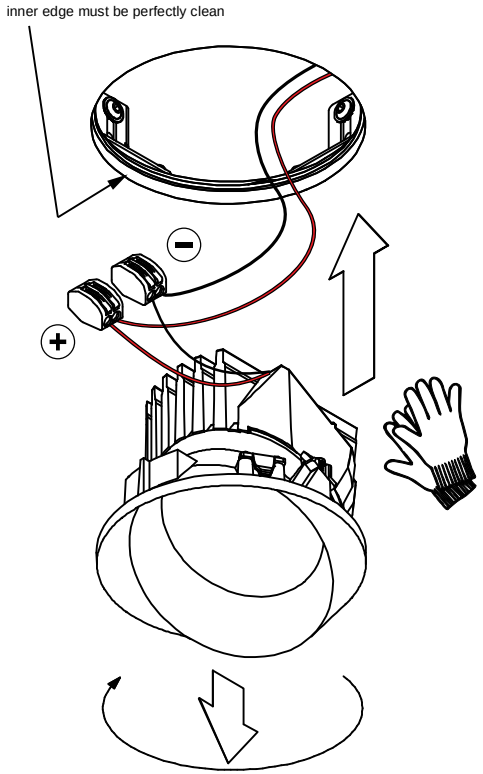

uninstall : Twist & Pull

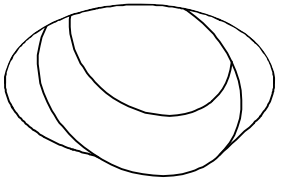

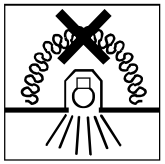

150mm for 350-500-700mA
200mm for 900mA

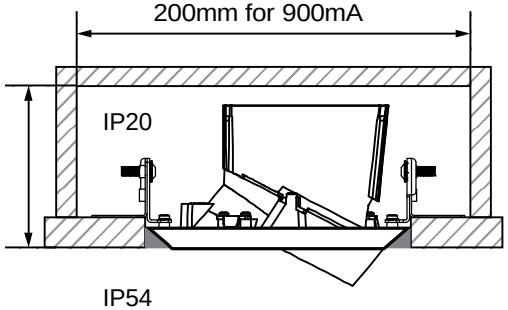

DO NOT TOUCH LED

The light source contained in this luminaire shall only be replaced by the manufacturer or his service agent or a similar qualified person

CHECK DIP-SWITCHES ON DRIVER

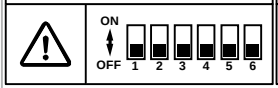

PREVENTING ELECTROSTATIC DAMAGE

A discharge of static electricity may damage sensitive components. Always be properly grounded when touching leads or circuitry inside the luminaire. Use a wrist strap connected by a ground cord to the housing. Avoid touching the light sources with bare hands.

CAN BE USED WITH
130730XX Wink flange

Drivers:
see driver matrix - latest version on website
www.supermodular.com or check sales contact

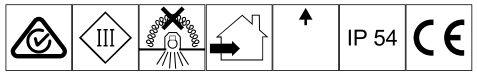

V5 - 20/09/2016